Prigušno nepovratni ventili

- Za preciznu kontrolu protoka vazduha radi precizne regulacije brzine kretanja pneumatskih cilindara
- Verzije za pneumatske cilindre (tip NSC-...) i verzije za razvodnike (tip NSC-...- MI)
- Izrađeni od visoko kvalitetnih materijala, jednostavni za upotrebu
- Omogućuju maksimalnu fleksibilnost u izvođenju svih pneumatskih instalacija u industriji
- Pogodni za upotrebu kod različitih tipova pneumatskih creva

Tehničke karakteristike

- Radni medijum: Vazduh (ne upotrebljavati za druge gasove ili tečnosti)
- Radni pritisak: 1 do 10 bar
- Radna temperatura: 0 °C do +60 °C

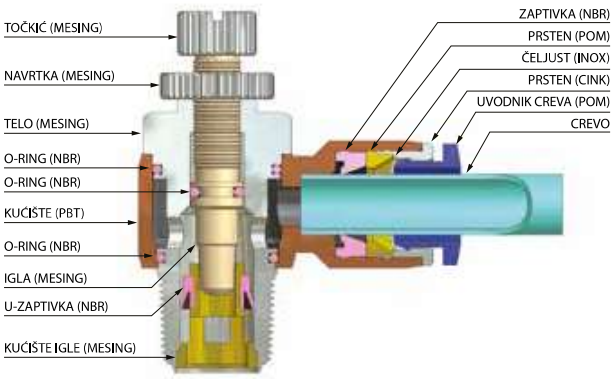

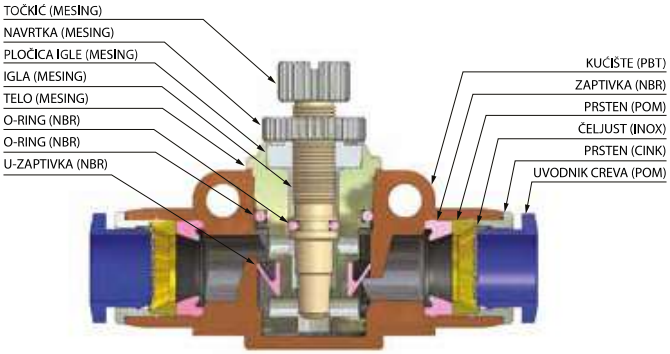

Ventil prigušno nepovratni tip NSC-G navoj

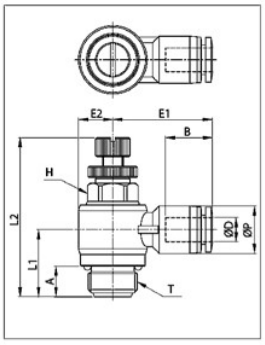

Model	Lager	ØD	ØP	T	L1	L2/MIN	L2/MAX	E1	E2	A	B	H(Hex)
NSC-4-G1/8	✓	4	10.5	G 1/8	15.3	34.6	39.8	23.3	7.0	6.0	15.3	8
NSC-4-G1/4		4	10.5	G 1/4	17.6	39.8	46.1	25.3	9.0	8.0	15.3	12
NSC-6-G1/8	✓	6	12.5	G 1/8	15.3	34.6	39.8	24.2	7.0	6.0	16.4	8
NSC-6-G1/4	✓	6	12.5	G 1/4	17.6	39.8	46.1	26.2	9.0	8.0	16.4	12
NSC-6-G3/8	✓	6	12.5	G 3/8	21.4	47.7	54.9	27.7	11.0	8.0	16.4	14
NSC-6-G1/2		6	12.5	G 1/2	22.9	54.5	61.7	30.8	14.0	9.0	16.4	17
NSC-8-G1/8	✓	8	14.5	G 1/8	14.2	34.6	39.8	25.9	7.0	6.0	18.3	8
NSC-8-G1/4	✓	8	14.5	G 1/4	16.9	39.8	46.1	27.9	9.0	8.0	18.3	12
NSC-8-G3/8	✓	8	14.5	G 3/8	21.4	47.7	54.9	28.9	11.0	8.0	18.3	14
NSC-8-G1/2	✓	8	14.5	G 1/2	22.9	54.5	61.7	31.8	14.0	9.0	18.3	17
NSC-10-G1/8	✓	10	17.5	G 1/8	12.7	34.6	39.8	27.9	7.0	6.0	19.7	8
NSC-10-G1/4	✓	10	17.5	G 1/4	16.4	39.8	46.1	29.9	9.0	8.0	19.7	12
NSC-10-G3/8	✓	10	17.5	G 3/8	20.1	47.7	54.9	31.0	11.2	8.0	19.7	14
NSC-10-G1/2	✓	10	17.5	G 1/2	22.9	54.5	61.7	33.4	14.0	9.0	19.7	17
NSC-12-G1/4		12	20.5	G 1/4	14.9	39.8	46.1	33.3	9.0	8.0	22.4	12
NSC-12-G3/8	✓	12	20.5	G 3/8	19.3	47.7	54.9	33.7	11.5	8.0	21.9	14
NSC-12-G1/2	✓	12	20.5	G 1/2	21.6	54.5	61.7	36.1	14.0	9.0	21.9	17

✓ - Artikal uvek dostupan za isporuku sa lagera

Ventil prigušno nepovratni tip NSC-R navoj

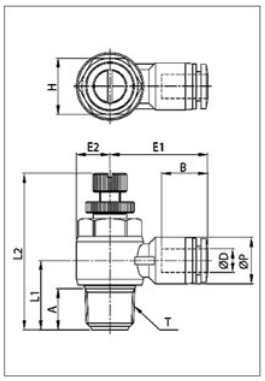

Model	Lager	ØD	ØP	T	L1	L2/MIN	L2/MAX	E1	E2	A	B	H(Hex)
NSC-3-M5		3	7.8	M5x0.8p	9.6	27.1	29.1	16.5	5.0	3.6	11.3	8
NSC-4-M3	✓	4	10.3	M3x0.5p	10.3	27.1	29.1	20.2	5.0	3.0	14.8	8
NSC-4-M5	✓	4	10.3	M5x0.8p	10.3	27.1	29.1	20.2	5.0	3.6	14.8	8
NSC-4-R1/8		4	10.5	R 1/8	15.1	35.5	40.7	23.3	7.0	8.2	15.3	11
NSC-4-R1/4		4	10.5	R 1/4	18.5	40.3	46.6	25.3	9.0	11.0	15.3	15
NSC-6-M5	✓	6	12.5	M5x0.8p	11.4	27.1	29.1	22.7	5.0	3.6	16.4	8
NSC-6-R1/8		6	12.5	R 1/8	15.1	35.5	40.7	24.2	7.0	8.2	16.4	11
NSC-6-R1/4		6	12.5	R 1/4	18.4	40.3	46.6	26.2	9.0	11.0	16.4	15
NSC-6-R3/8		6	12.5	R 3/8	21.9	46.9	54.9	27.7	11.0	12.2	16.4	19
NSC-6-R1/2		6	12.5	R 1/2	26.5	54.0	60.1	30.8	14.0	16.5	16.4	24
NSC-8-R1/8		8	14.5	R 1/8	16.2	35.5	40.7	26.0	7.0	8.2	18.3	11
NSC-8-R1/4		8	14.5	R 1/4	19.3	40.3	46.6	28.0	9.0	11.0	18.3	15
NSC-8-R3/8		8	14.5	R 3/8	21.9	46.9	54.9	29.0	11.0	12.2	18.3	19
NSC-8-R1/2		8	14.5	R 1/2	26.5	54.0	60.1	31.9	14.0	16.5	18.3	24
NSC-10-R1/8		10	17.5	R 1/8	17.7	35.5	40.7	27.9	7.0	8.2	19.7	11
NSC-10-R1/4		10	17.5	R 1/4	20.7	40.3	46.6	29.9	9.0	11.0	19.7	15
NSC-10-R3/8		10	17.5	R 3/8	23.2	46.9	54.9	31.0	11.2	12.2	19.7	19
NSC-10-R1/2		10	17.5	R 1/2	26.5	54.0	60.1	33.4	14.0	16.5	19.7	24
NSC-12-R1/4		12	20.5	R 1/4	22.2	40.3	46.6	33.3	9.0	11.0	22.4	15
NSC-12-R3/8		12	20.5	R 3/8	24.0	46.9	54.9	33.7	11.5	12.2	21.9	19
NSC-12-R1/2		12	20.5	R 1/2	28.0	54.0	60.1	36.1	14.0	16.5	21.9	24

Ventil prigušno nepovratni tip NSF

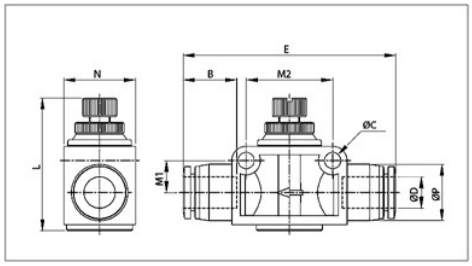

Model	Lager	ØD	ØP	L/MIN	L/MAX	E	N	ØC	B	M1	M2
NSF-4	✓	4	11.0	26.4	28.9	42.1	12.0	3.2	14.8	5.4	15.4
NSF-6	✓	6	13.0	33.5	37.9	49.5	16.0	4.3	16.4	7.8	7.8
NSF-8	✓	8	15.0	35.5	41.5	56.7	19.0	4.3	18.3	8.5	8.5
NSF-10	✓	10	17.5	40.7	48.7	63.4	23.0	4.3	20.2	10.6	10.6
NSF-12	✓	12	20.5	45.0	53.5	73.9	26.5	4.4	22.9	11.9	11.9